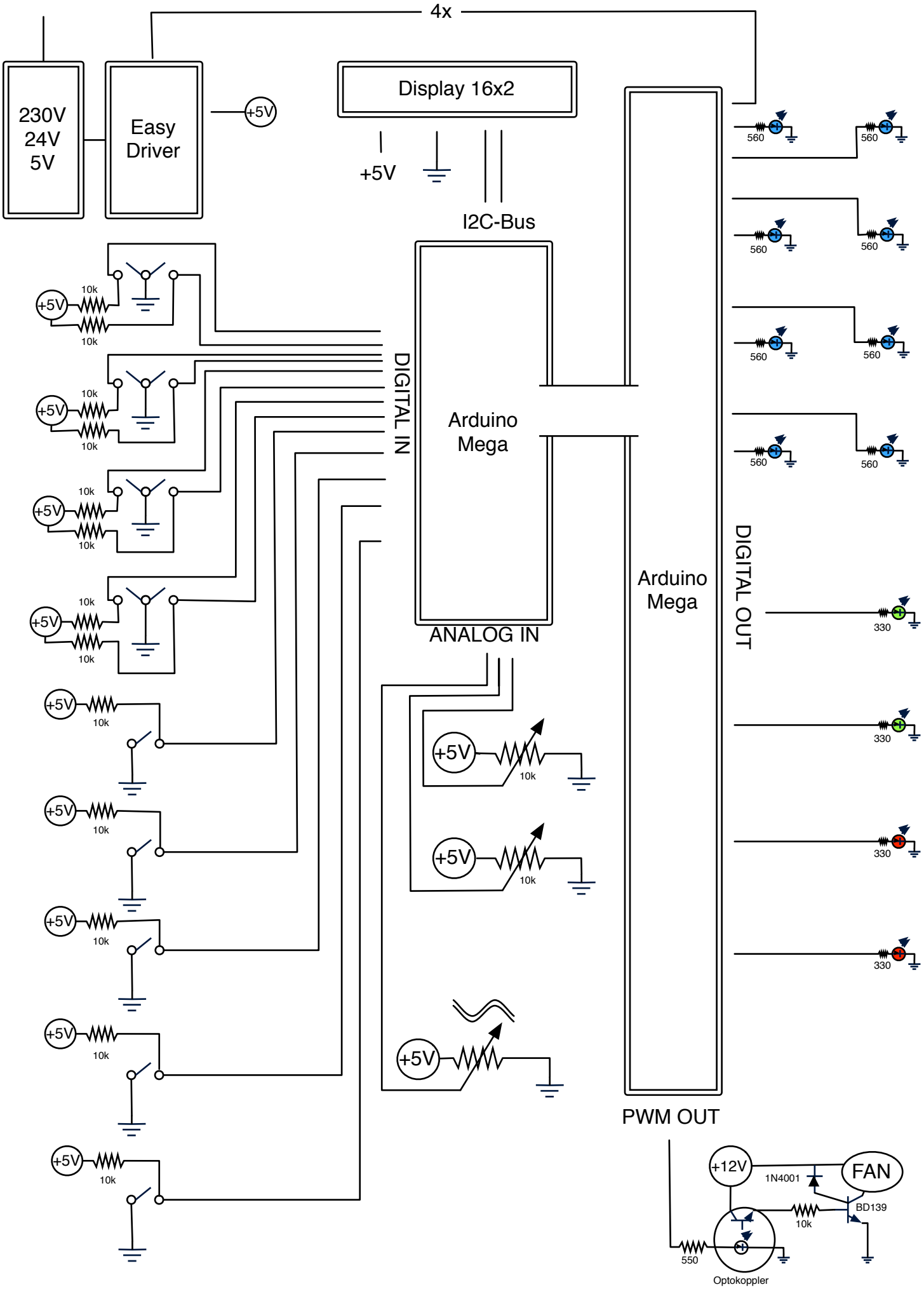
4x
230V
24V
5V
Easy
Driver
+5V
Display 16x2
+5V
I2C-Bus
DIGITAL IN
Arduino
Mega
ANALOG IN
Arduino
Mega
DIGITAL OUT
PWM OUT
10k
560
330
+12V
1N4001
FAN
BD139
550
Optokoppler